# ADJUSTABLE ALUMINUM GANTRY CRANE - AHA-15-8-10-PNU

APPROX WEIGHT: 279 lbs.
*DOES NOT INCLUDE WEIGHT OF POWER OR PACKAGING!!!*

*** ANY ADDITIONS, DELETIONS, OR OMISSIONS MUST BE CORRECTED ON THIS DRAWING AS THIS DRAWING WILL BE CONSIDERED ALL INCLUSIVE ***

ALL GRAPHICS PROVIDED ARE FOR REFERENCE ONLY. IF CERTAIN DIMENSIONS ARE CRITICAL PLEASE VERIFY THOSE DIMENSIONS WITH YOUR SALESPERSON

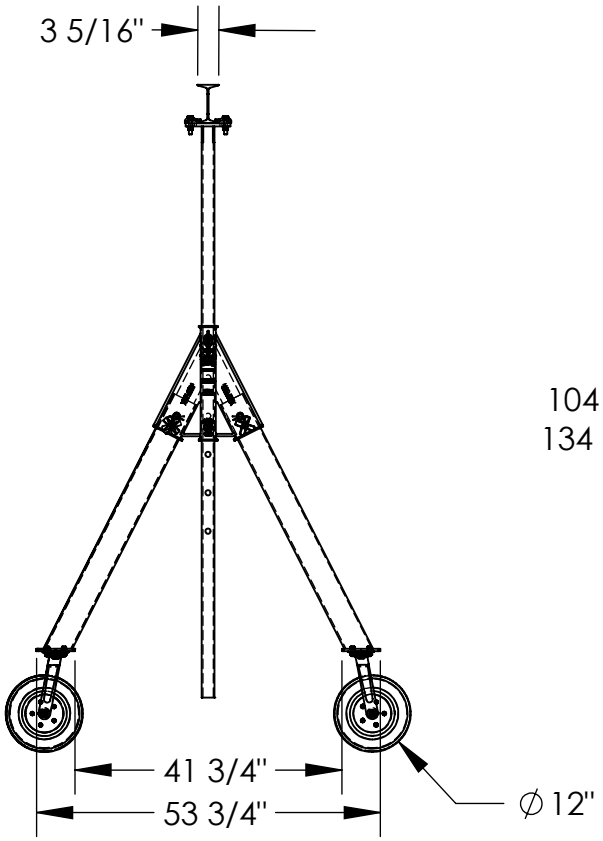


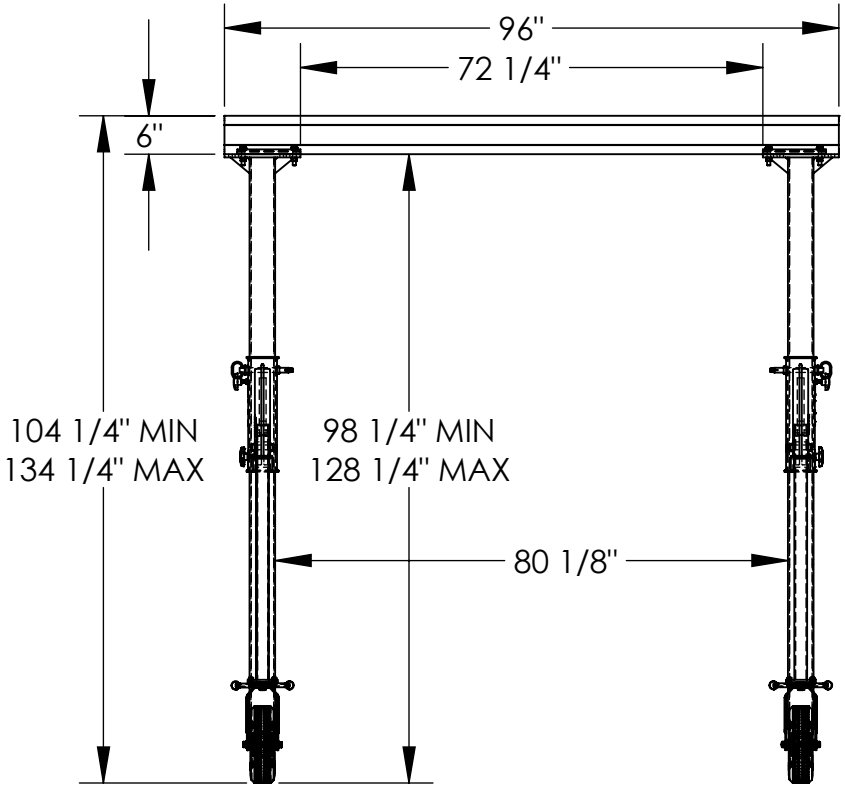


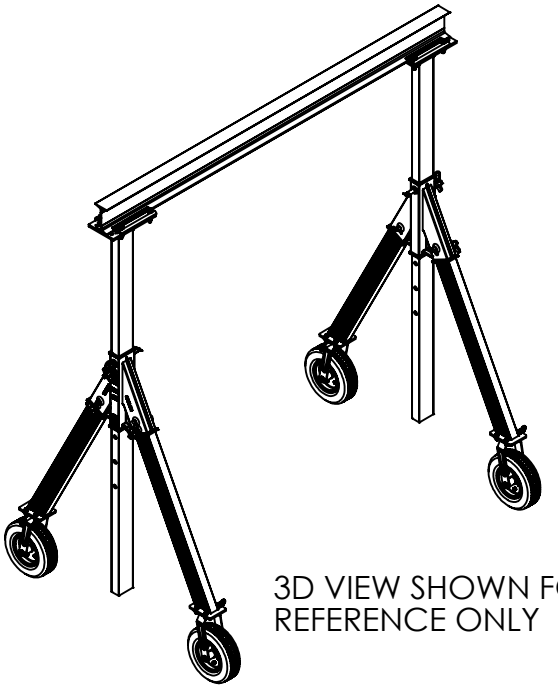

3D VIEW SHOWN FOR REFERENCE ONLY

DIMENSION TOLERANCE ± 1/4"

## STANDARD FEATURES

MODEL NUMBER IS AHA-15-8-10-PNU
CAPACITY IS 1,500 LBS.
BASE WIDTH IS53 3/4"
MAX OVERALL HEIGHT IS 134 1/4"
I-BEAM HEIGHT IS6"
I-BEAM FLANGE WIDTH IS3 5/16"
OVERALL I-BEAM LENGTH IS 96"
USABLE I-BEAM LENGTH IS 72 1/4"
ADJUSTABLE UNDER I-BEAM HEIGHT
98 1/4"
HEIGHT IS ADJUSTABLE IN 6" INCREMENTS
CASTERS: (4) Ø12" X 3 1/2" WIDE
PNEUMATIC SWIVEL CASTERS WITH
FOUR LOCKING POSITIONS
CRANE MAY BE TAKEN APART AND BUNDLED WITH
(2) INCLUDED STRAPS FOR EASY TRANSPORT
ALUMINUM CONSTRUCTION

## SPECIAL FEATURES

NONE

**APPROVAL**

I, THE UNDERSIGNED, AGREE THAT THE PRODUCT AS REPRESENTED SATISFIES DESIGN AND DIMENSION REQUIREMENTS. I ALSO ACKNOWLEDGE MY DUTY TO CONFIRM PRODUCT AND INSTALLATION COMPLIANCE WITH ALL APPLICABLE FEDERAL, STATE AND LOCAL REGULATIONS AND STANDARDS.

**UNITS REQUIRING APPROVAL DRAWINGS OR MODIFIED ARE NON-RETURNABLE**

[ ] As drawn [ ] As marked

Signed:_____ Date:_____

Printed Name:_____

*LEAD TIME WILL START UPON RECEIPT OF SIGNED APPROVAL DRAWING*

| | | |
|---|---|---|
| DISTRIBUTOR'S NAME: HOF EQUIPMENT COMPANY PH: 888-990-1150 | | P.O.# X |
| | | W.O.# X |
| DRAWN BY: ND | DATE: 7/11/13 | SALES: X |
| REFERENCE: X | SCALE: 1:30 | FILE NAME: 28-007-286 |
| QUOTED LEAD TIME: X | QUOTE # X | |

# ADJUSTABLE ALUMINUM GANTRY CRANE - AHA-15-10-10-PNU

APPROX WEIGHT: 286 lbs.
*DOES NOT INCLUDE WEIGHT OF POWER OR PACKAGING!!!*

*** ANY ADDITIONS, DELETIONS, OR OMISSIONS MUST BE CORRECTED ON THIS DRAWING AS THIS DRAWING WILL BE CONSIDERED ALL INCLUSIVE ***
ALL GRAPHICS PROVIDED ARE FOR REFERENCE ONLY. IF CERTAIN DIMENSIONS ARE CRITICAL PLEASE VERIFY THOSE DIMENSIONS WITH YOUR SALESPERSON

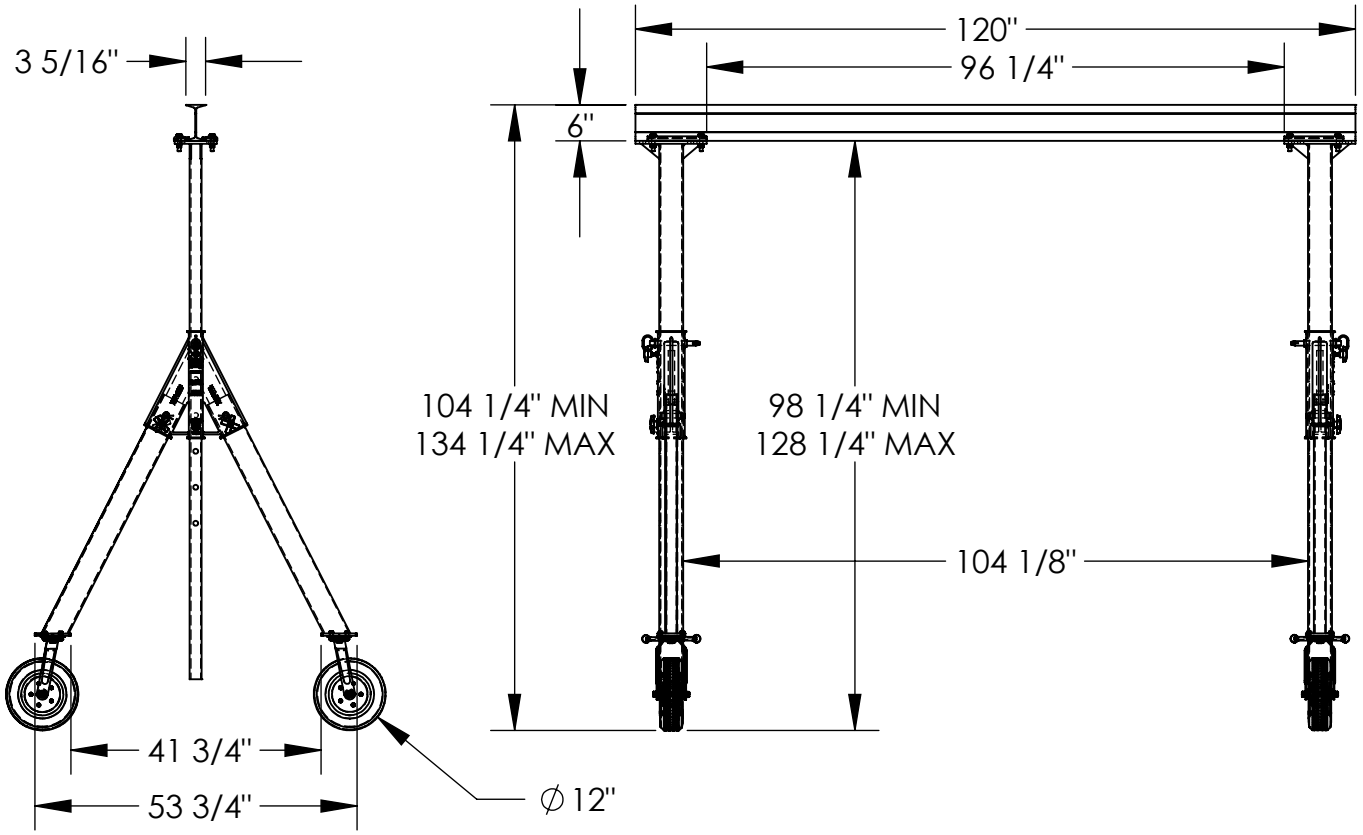


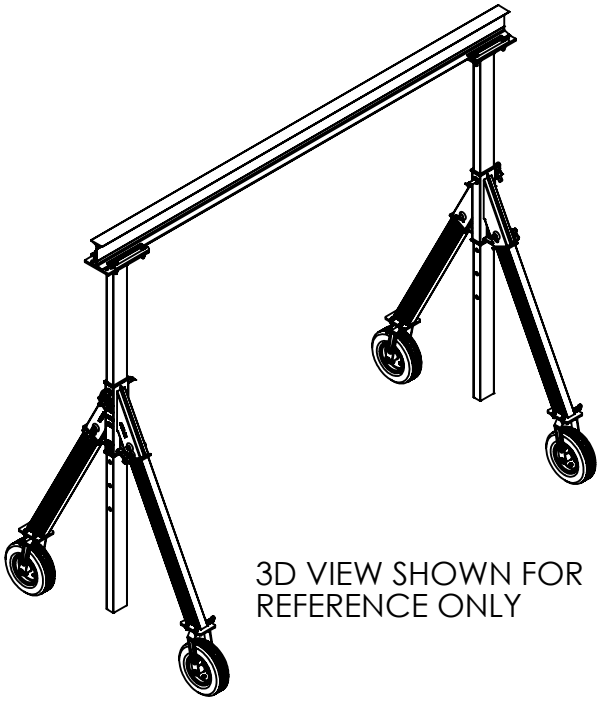

3D VIEW SHOWN FOR REFERENCE ONLY

DIMENSION TOLERANCE ± 1/4"

## *STANDARD FEATURES*

MODEL NUMBER IS AHA-15-10-10-PNU
CAPACITY IS 1,500 LBS.
BASE WIDTH IS 53 3/4"
MAX OVERALL HEIGHT IS 134 1/4"
I-BEAM HEIGHT IS6"
I-BEAM FLANGE WIDTH IS3 5/16"
OVERALL I-BEAM LENGTH IS 120"
USABLE I-BEAM LENGTH IS 96 1/4"
ADJUSTABLE UNDER I-BEAM HEIGHT
98 1/4"
HEIGHT IS ADJUSTABLE IN 6" INCREMENTS
CASTERS: (4) Ø12" X 3 1/2" WIDE
PNEUMATIC SWIVEL CASTERS WITH
FOUR LOCKING POSITIONS
CRANE MAY BE TAKEN APART AND BUNDLED WITH
(2) INCLUDED STRAPS FOR EASY TRANSPORT
ALUMINUM CONSTRUCTION

## *SPECIAL FEATURES*

NONE

**APPROVAL**

I, THE UNDERSIGNED, AGREE THAT THE PRODUCT AS REPRESENTED SATISFIES DESIGN AND DIMENSION REQUIREMENTS. I ALSO ACKNOWLEDGE MY DUTY TO CONFIRM PRODUCT AND INSTALLATION COMPLIANCE WITH ALL APPLICABLE FEDERAL, STATE AND LOCAL REGULATIONS AND STANDARDS.

**UNITS REQUIRING APPROVAL DRAWINGS OR MODIFIED ARE NON-RETURNABLE**

[ ] As drawn [ ] As marked

Signed:_____ Date:_____

Printed Name:_____

*LEAD TIME WILL START UPON RECEIPT OF SIGNED APPROVAL DRAWING*

| | | |
|---|---|---|
| DISTRIBUTOR'S NAME: HOF EQUIPMENT COMPANY PH: 888-990-1150 | | P.O.# X |
| | | W.O.# X |
| DRAWN BY: ND | DATE: 07/11/13 | SALES: X |
| REFERENCE: X | SCALE: 1:32 | FILE NAME: 28-007-289 |
| QUOTED LEAD TIME: X | QUOTE # X | |

# ADJUSTABLE ALUMINUM GANTRY CRANE - AHA-15-12-10-PNU

APPROX WEIGHT: 308 lbs.
*DOES NOT INCLUDE WEIGHT OF POWER OR PACKAGING!!!*

*** ANY ADDITIONS, DELETIONS, OR OMISSIONS MUST BE CORRECTED ON THIS DRAWING AS THIS DRAWING WILL BE CONSIDERED ALL INCLUSIVE ***
ALL GRAPHICS PROVIDED ARE FOR REFERENCE ONLY. IF CERTAIN DIMENSIONS ARE CRITICAL PLEASE VERIFY THOSE DIMENSIONS WITH YOUR SALESPERSON

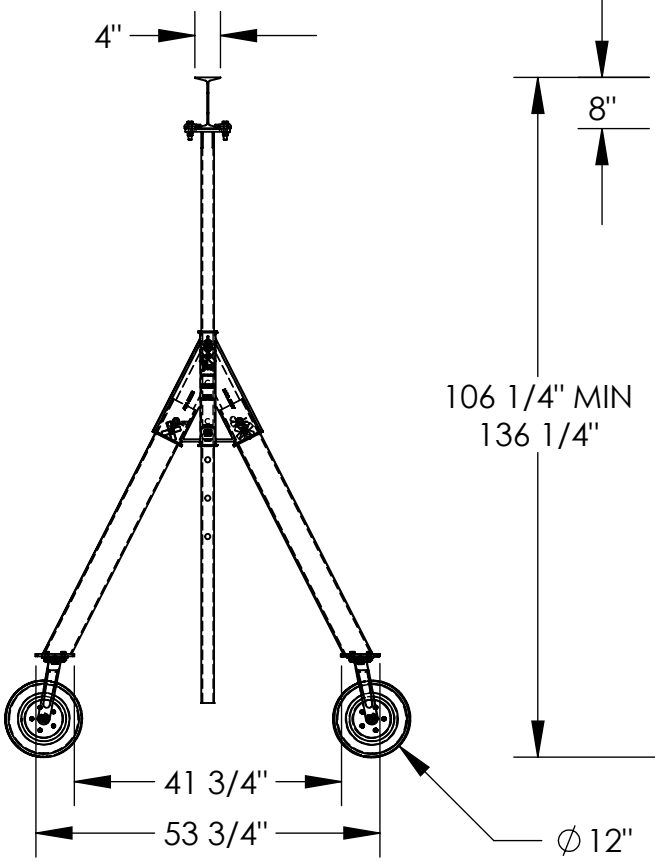


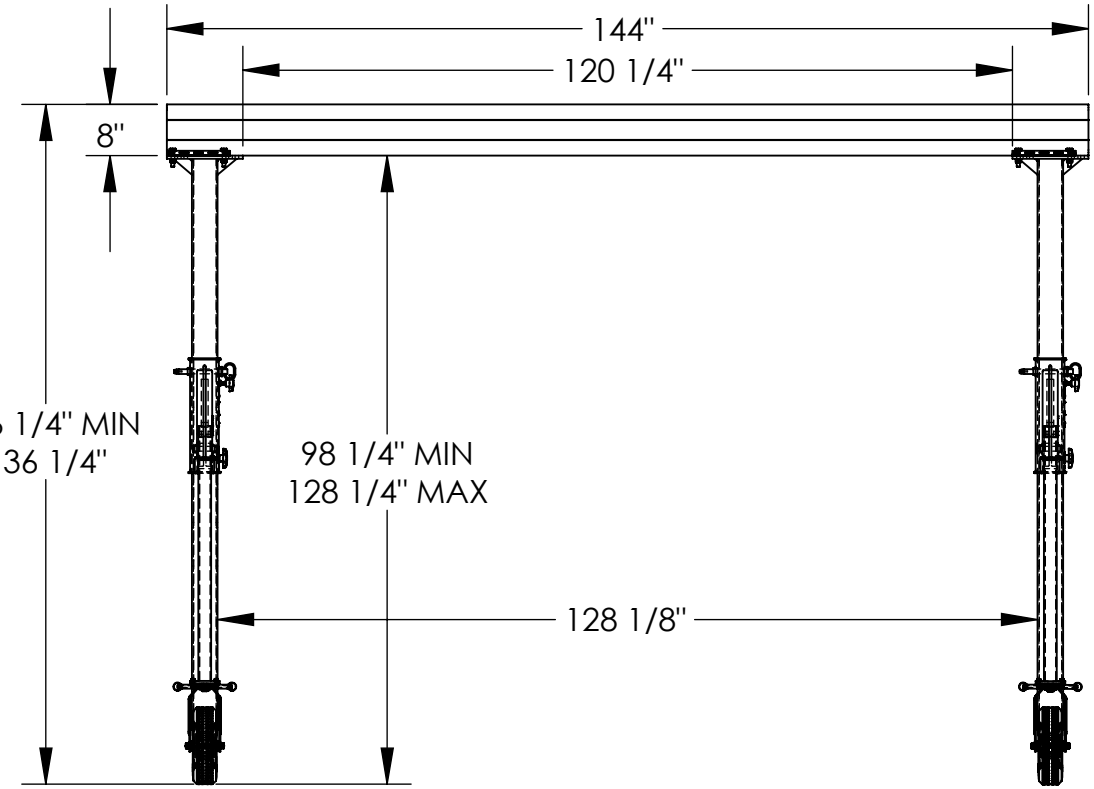

3D VIEW SHOWN FOR REFERENCE ONLY

DIMENSION TOLERANCE ± 1/4"

## *STANDARD FEATURES*

MODEL NUMBER IS AHA-15-12-10-PNU
CAPACITY IS 1,500 LBS.
BASE WIDTH IS 53 3/4"
MAX OVERALL HEIGHT IS 136 1/4"
I-BEAM HEIGHT IS 8"
I-BEAM FLANGE WIDTH IS 4"
OVERALL I-BEAM LENGTH IS 144"
USABLE I-BEAM LENGTH IS 120 1/4"
ADJUSTABLE UNDER I-BEAM HEIGHT
98 1/4" MIN
128 1/4" MAX
HEIGHT IS ADJUSTABLE IN 6" INCREMENTS
CASTERS: (4) Ø12" X 3 1/2" WIDE
PNEUMATIC SWIVEL CASTERS WITH
FOUR LOCKING POSITIONS
CRANE MAY BE TAKEN APART AND BUNDLED WITH
(2) INCLUDED STRAPS FOR EASY TRANSPORT
ALUMINUM CONSTRUCTION

## *SPECIAL FEATURES*

NONE

**APPROVAL**

I, THE UNDERSIGNED, AGREE THAT THE PRODUCT AS REPRESENTED SATISFIES DESIGN AND DIMENSION REQUIREMENTS. I ALSO ACKNOWLEDGE MY DUTY TO CONFIRM PRODUCT AND INSTALLATION COMPLIANCE WITH ALL APPLICABLE FEDERAL, STATE AND LOCAL REGULATIONS AND STANDARDS.

**UNITS REQUIRING APPROVAL DRAWINGS OR MODIFIED ARE NON-RETURNABLE**

[ ] As drawn [ ] As marked

Signed:_____ Date:_____

Printed Name:_____

*LEAD TIME WILL START UPON RECEIPT OF SIGNED APPROVAL DRAWING*

| | | |
|---|---|---|
| DISTRIBUTOR'S NAME: HOF EQUIPMENT COMPANY PH: 888-990-1150 | | P.O.# X |
| | | W.O.# X |
| DRAWN BY: ND | DATE: 07/11/13 | SALES: X |
| REFERENCE: X | SCALE: 1:30 | FILE NAME: 28-007-292 |
| QUOTED LEAD TIME: X | QUOTE # X | |

# ADJUSTABLE ALUMINUM GANTRY CRANE - AHA-15-15-10-PNU

APPROX WEIGHT: 359 lbs.
*DOES NOT INCLUDE WEIGHT OF POWER OR PACKAGING!!!*

*** ANY ADDITIONS, DELETIONS, OR OMISSIONS MUST BE CORRECTED ON THIS DRAWING AS THIS DRAWING WILL BE CONSIDERED ALL INCLUSIVE ***
ALL GRAPHICS PROVIDED ARE FOR REFERENCE ONLY. IF CERTAIN DIMENSIONS ARE CRITICAL PLEASE VERIFY THOSE DIMENSIONS WITH YOUR SALESPERSON

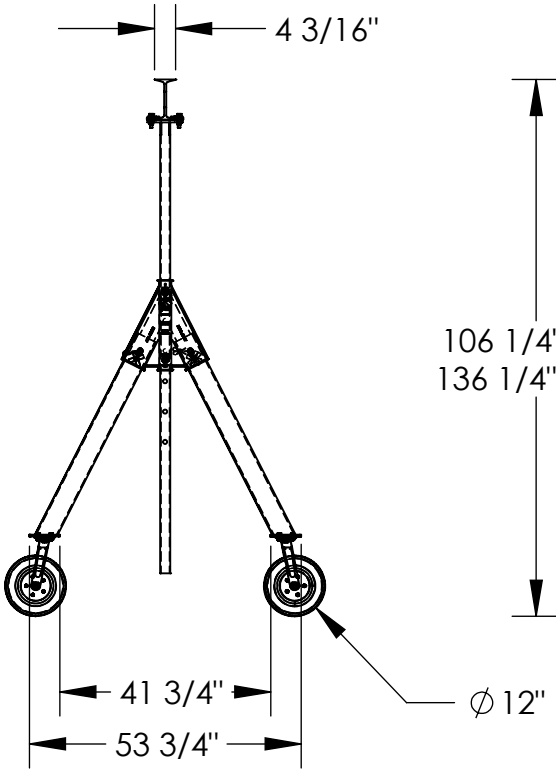


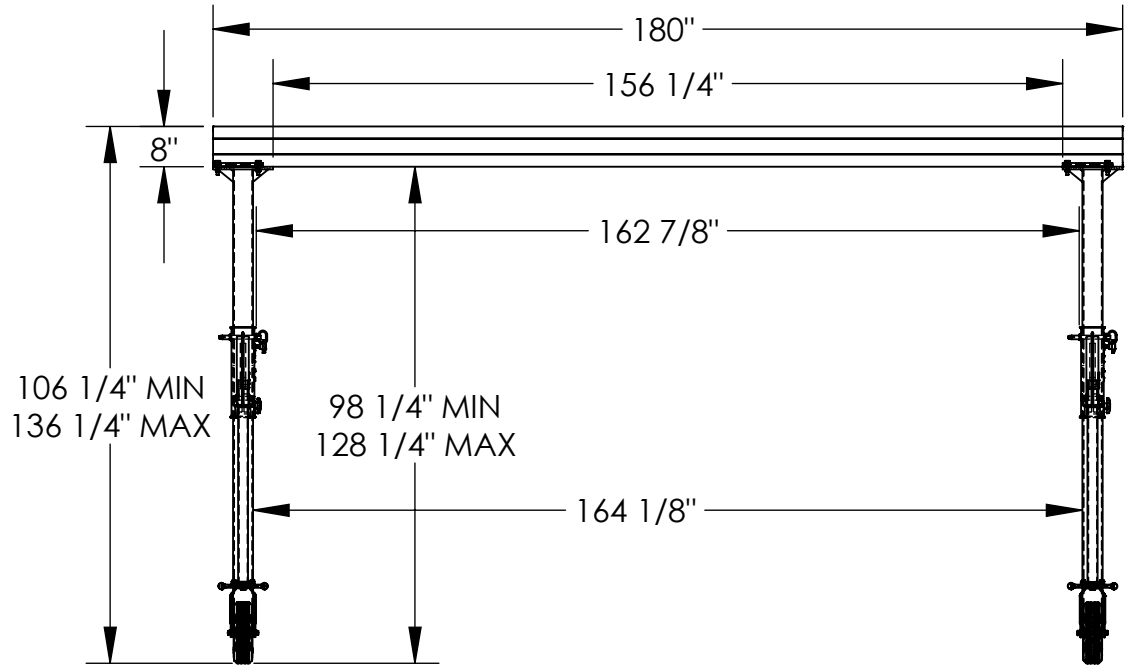

3D VIEW SHOWN FOR REFERENCE ONLY

DIMENSION TOLERANCE ± 1/4"

## STANDARD FEATURES

MODEL NUMBER IS AHA-15-15-10-PNU
CAPACITY IS 1,500 LBS.
BASE WIDTH IS 53 3/4"
MAX OVERALL HEIGHT IS 136 1/4"
I-BEAM HEIGHT IS 8"
I-BEAM FLANGE WIDTH IS 4 3/16" "
OVERALL I-BEAM LENGTH IS 180"
USABLE I-BEAM LENGTH IS 156 1/4"
ADJUSTABLE UNDER I-BEAM HEIGHT
98 1/4" MIN
128 1/4" MAX
HEIGHT IS ADJUSTABLE IN 6" INCREMENTS
CASTERS: (4) Ø12" X 3 1/2" WIDE
PNEUMATIC SWIVEL CASTERS WITH
FOUR LOCKING POSITIONS
CRANE MAY BE TAKEN APART AND BUNDLED WITH
(2) INCLUDED STRAPS FOR EASY TRANSPORT
ALUMINUM CONSTRUCTION

## SPECIAL FEATURES

NONE

**APPROVAL**

I, THE UNDERSIGNED, AGREE THAT THE PRODUCT AS REPRESENTED SATISFIES DESIGN AND DIMENSION REQUIREMENTS. I ALSO ACKNOWLEDGE MY DUTY TO CONFIRM PRODUCT AND INSTALLATION COMPLIANCE WITH ALL APPLICABLE FEDERAL, STATE AND LOCAL REGULATIONS AND STANDARDS.

**UNITS REQUIRING APPROVAL DRAWINGS OR MODIFIED ARE NON-RETURNABLE**

[ ] As drawn [ ] As marked

Signed:_____ Date:_____

Printed Name:_____

*LEAD TIME WILL START UPON RECEIPT OF SIGNED APPROVAL DRAWING*

| | | |
|---|---|---|
| DISTRIBUTOR'S NAME: HOF EQUIPMENT COMPANY PH: 888-990-1150 | | P.O.# X |
| | | W.O.# X |
| DRAWN BY: X | DATE: XX/XX/XX | SALES: X |
| REFERENCE: X | SCALE: 1:38 | FILE NAME: 28-007-295 |
| QUOTED LEAD TIME: X | QUOTE # X | |